NATIONAL CERTIFIED TESTING LABORATORIES

FIVE LEIGH DRIVE • YORK, PENNSYLVANIA 17406 • TELEPHONE (717) 846-1200
FAX (717) 767-4100
www.nctlinc.com

PRODUCT EVALUATION

47000 Single Hung Window – non-Impact

REPORT TO:

TAFCO CORPORATION
1953 NORTH 17TH AVENUE
MELROSE PARK, IL 60160

REPORT NUMBER: NCTL-110-24107-2
REPORT DATE: 03/10/21

JOSEPH A. REED
LICENSE
No. 58920
STATE OF
FLORIDA
PROFESSIONAL ENGINEER

Joseph A. Reed, PE
FL PE 58920
FL REG 33474
2021.03.11 08:41:42 -05'00'

Subject: 47000 Single Hung Window – non-Impact
TAFCO Corporation
1953 North 17th Avenue
Melrose Park, Illinois 60160

Scope: Product Evaluation per Chapter 61G20-3.005(1)(d) Florida Administrative Code, Evaluation report from a Florida Registered Architect or a Licensed Florida Professional Engineer.

Building Code Compliance: This product has demonstrated compliance with the Florida Building Code, Building, 7th Edition (2020):
§1709.5 Exterior window and door assemblies
§2404 Wind, Snow, Seismic and Dead Loads on Glass

Performance Standards: TAS 202
ASTM E1300-12ae1

Product Description: Window Frame Aluminum (6063-T5)
Square cut and coped corner construction secured with two (2) #8 x 1" screws at each corner.

Window Sash Aluminum (6063-T5)
Square cut and coped corner construction. Operable sash corners secured with corner key and two (2) #7 x 1" screws at each corner. Fixed sash corners secured with one (1) #8 x 1" screw at each corner. Fixed sash secured to jambs at each corner with a 2-1/2" long aluminum clip and one (1) #8 x 2" screw.

Glazing Validate Glazing with ASTM E1300

Glazing Type	Glazing Construction
G1 (Monolithic Glass)	1/8" Annealed

Interior glazed against silicone back bedding (Dow 795). Interior snap-in aluminum glazing bead. Interior and exterior EPDM wedge gaskets. 1/2" bite.

Anchorage Various anchorages (see *Installation*)

For additional product information see Appendix A and attached product drawings.

Installation: Wood: Minimum Southern Yellow Pine 2x (G = 0.55).
#10 Wood Screw (Shall conform to ANSI/ASME B18.6.1 and be corrosion resistant).

Steel Stud: Minimum 18 gauge (0.043" thick) 33 KSI steel stud.
#10-16 TEKS screw (see ICC ESR 1976).

Concrete: Minimum f'_c = 3,000 psi.
3/16" ITW Tapcon with Advanced Threadform Technology Concrete and Masonry Anchors (see NOA 16-1222.06).

Concrete Masonry: ASTM C90, minimum f'_m = 1,500 psi.
3/16" ITW Tapcon with Advanced Threadform Technology Concrete and Masonry Anchors (see NOA 16-1222.06).

Installation shall follow manufacturer's instructions, product approvals and the referenced installation drawings.

Limitations of Use:

Product	Maximum Design Pressures	Impact Resistance	Maximum Overall Size	Maximum Glazing Size
47000 Single Hung (Glazing Type G1)	+30/-65 psf	N/A	52-1/4" x 49-5/8"	47" x 20-1/4"

Note: Structural performance +60/-65 psf
Water Test performance +4.50 psf

Products have not been tested for windborne debris resistance and will require protective devices (i.e. shutters) if installed in a windborne debris region.

Products are approved for use in High Velocity Hurricane Zone (HVHZ).

Supporting Evidence: Test Report QCT21-6222.01 (TAS 202, ASTM F588)
Revision 1, 03/05/21
Quast Consulting and Testing. Mosinee, Wisconsin (TST8039)

Calculation Report NCTL-110-24107-1
Revision -, 03/10/21
Joseph A. Reed, PE (FL PE 58920)

Certification of Independence: In accordance with Rule 61G20-3 Florida Administrative Code, National Certified Testing Laboratories hereby certifies the following:

1. National Certified Testing Laboratories does not have, nor does it intend to acquire or will it acquire, a financial interest in any company manufacturing or distributing products tested or labeled by the agency.

2. National Certified Testing Laboratories is not owned, operated or controlled by any company manufacturing or distributing products it tests or labels.

3. Joseph A. Reed, P.E. does not have nor will acquire, a financial interest in any company manufacturing or distributing products for which the reports are being issued.

4. Joseph A. Reed, P.E does not have, nor will acquire, a financial interest in any other entity involved in the approval process of the product.

Reference Drawings: *47000 Single Hung – non-Impact*. Revision -, 03/10/21.

Revision Log

Identification	Date	Page & Revision
Original Issue	03/10/21	Not Applicable

Appendix A – Detailed Product Description

Glazing Details: Interior glazed against a silicone back bedding (Dow 795). Interior snap-in aluminum glazing bead. Interior and exterior EPDM wedge gaskets. 1/2" bite.

Weatherstripping:	Vinyl bulb.	One row at sill.
	7/32" pile gasket.	One row at sill upstand.
	7/32" pile gasket.	Two rows at each sash stile.
	7/32" pile gasket.	One row at top sash bottom rail.
	7/32" pile gasket.	Two rows at top sash top rail.
	1/2"x3/8" dust plug.	Bottom of fixed stiles and bottom of jambs (4 total)

Frame Construction: Square cut and coped corner construction secured with two (2) #7 x 1" screws at each corner.

Sash Construction: Square cut and coped corner construction. Operable sash corners secured with corner key and two (2) #7 x 1" screws at each corner. Fixed sash corners secured with one (1) #8 x 1" screw at each corner. Fixed sash secured to jambs at each corner with a 2-1/2" long aluminum clip and one (1) #8 x 2" screw.

Drainage: Sloped sill

Hardware:	Primeline F2950 Sash Locks	Two (2) total	Bottom sash top rail, 7" from each end.
	Pinch Locks	Two (2) total	Bottom sash bottom rail, 6-1/2" from each end.
	Swisco 385-23 Sash Balance	Two (2) total	Bottom sash stiles.

Reinforcement: 5/8" wide by 1/2" tall steel bar in fixed meeting rail.

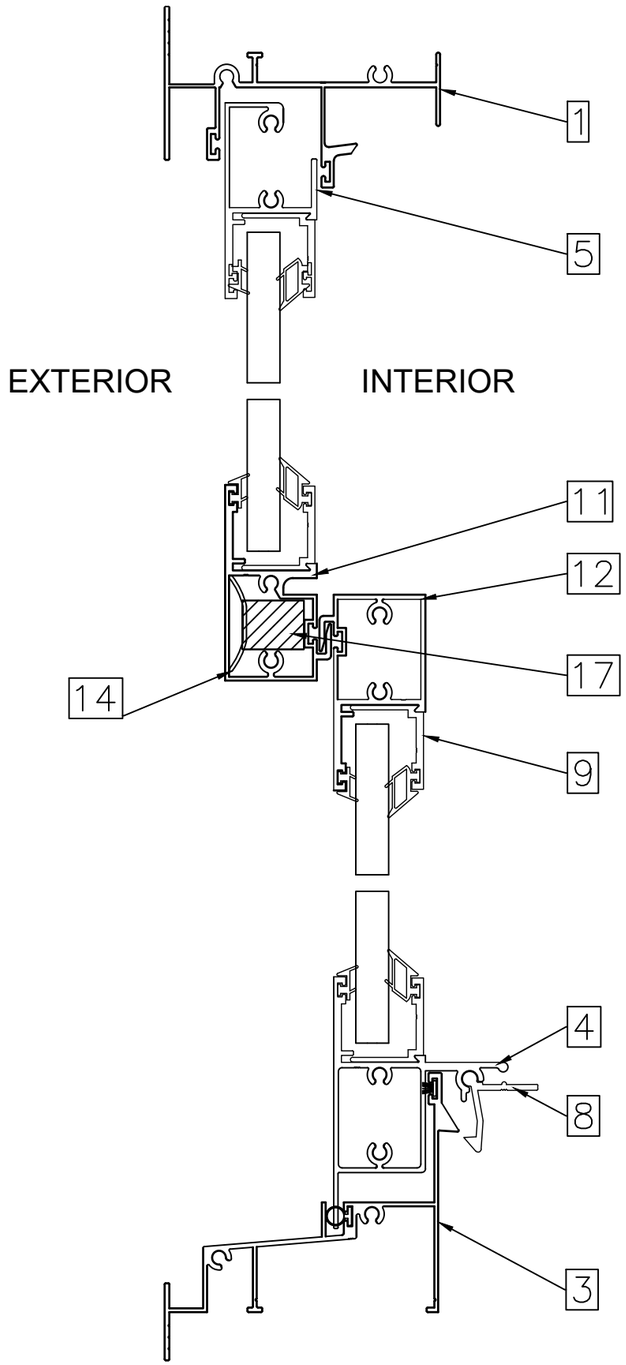

VERTICAL SECTION

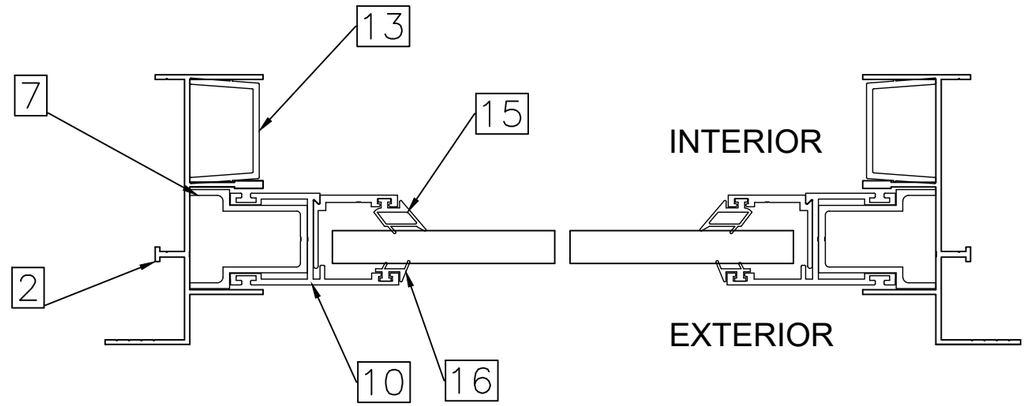

HORIZONTAL SECTION AT TOP SASH

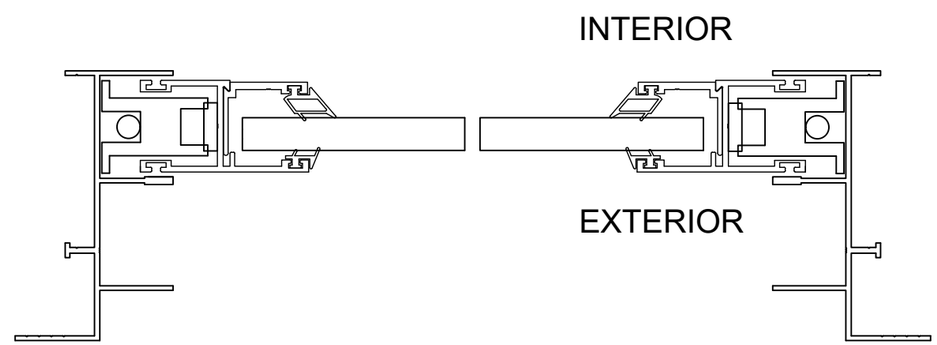

HORIZONTAL SECTION AT BOTTOM SASH

ITEM NO.	NAME	MATERIAL	DESCRIPTION
1	Head	6063-T5	EXTRUSION
2	Jamb	6063-T5	EXTRUSION
3	Sill	6063-T5	EXTRUSION
4	Bottom Sash Bottom Rail	6063-T5	EXTRUSION
5	Fixed Sash Top Rail	6063-T5	EXTRUSION
7	Fixed Sash Support	6063-T5	EXTRUSION
8	Pinch Lock	6063-T5	EXTRUSION
9	Glazing Bead	6063-T5	EXTRUSION
10	Sash Stile	6063-T5	EXTRUSION
11	Fixed Sash Bottom Rail	6063-T5	EXTRUSION
12	Bottom Sash Top Rail	6063-T5	EXTRUSION
13	Track Filler	PA6	INJECTION MOLD
14	Reinforcement Retainer	PA6	INJECTION MOLD
15	Wedge Gasket	EPDM RUBBER	EXTRUSION
16	Wedge Gasket	EPDM RUBBER	EXTRUSION
17	1/2" x 5/8" Reinforcement	STEEL	FLAT BAR STOCK

HARDWARE		
ITEM	NUMBER	LOCATION
PRIMELINE F2950 SASH LOCK	2	TOP RAIL OF BOTTOM SASH
PINCH LOCK	2	BOTTOM RAIL OF BOTTOM SASH
SWISCO 385-23 BALANCE	2	ONE EACH JAMB
WEATHERSTRIPPING		
ITEM	NUMBER	LOCATION
7/32" PILE GASKET	1 ROW	SILL UPSTAND
7/32" PILE GASKET	2 ROWS	EACH SASH STILE
7/32" PILE GASKET	1 ROW	TOP SASH BOTTOM RAIL
7/32" PILE GASKET	2 ROWS	TOP SASH TOP RAIL
VINYL BULB	1 ROW	SILL
1/2"x3/8" DUST PLUG	2	BOTTOM OF FIXED STILES
1/2"x3/8" DUST PLUG	2	BOTTOM OF JAMBS

47000 Single Hung - non-Impact
Sections and Bill of Material

TAFCO Corporation
1953 North 17th Avenue
Melrose Park, IL 60160

Drawing No.: 24107-1-1001
Project No.: 24107-1
Drawn By: JAR Rev: - Date: 03/10/21

Scale: NTS

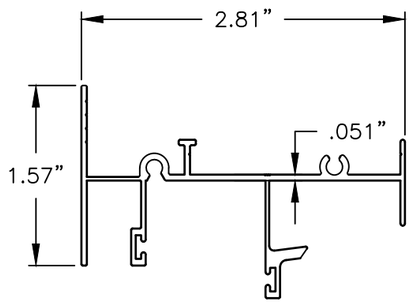

HEAD
6063–T5

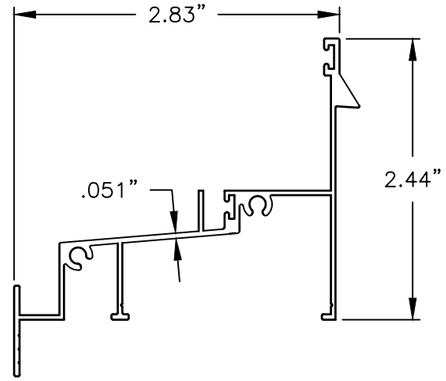

SILL
6063–T5

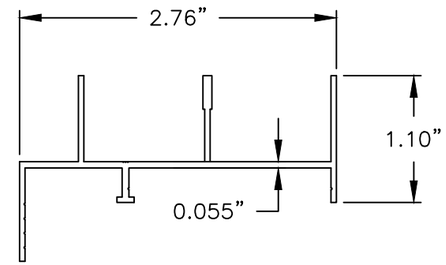

JAMB
6063–T5

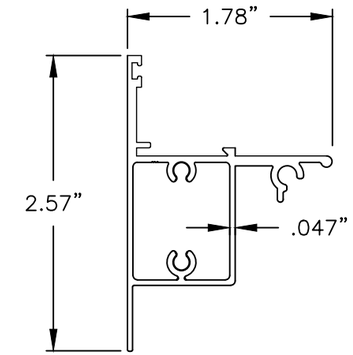

BOTTOM SASH BOTTOM RAIL
6063–T5

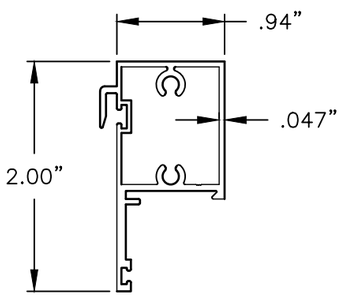

BOTTOM SASH TOP RAIL
6063–T5

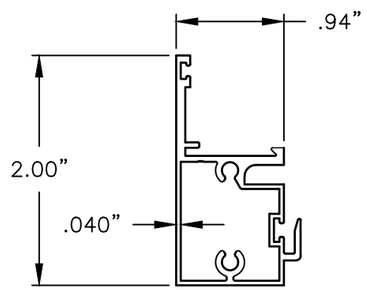

TOP SASH BOTTOM RAIL
6063–T5

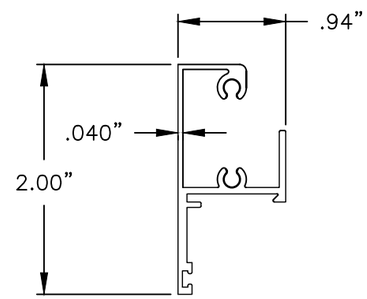

TOP SASH TOP RAIL
6063–T5

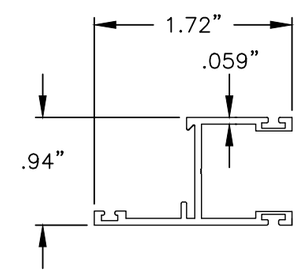

SASH STILE
6063–T5

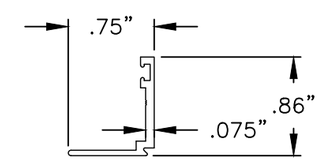

BLAZING BEAD
6063–T5

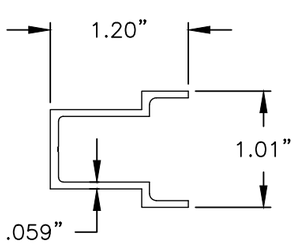

SASH SUPPORT
6063–T5

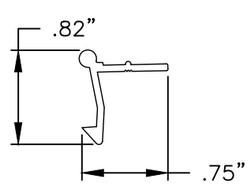

PINCH LOCK
6063–T5

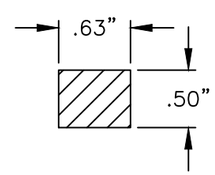

REINFORCEMENT
STEEL

47000 Single Hung - non-Impact
Components

TAFCO Corporation
1953 North 17th Avenue
Melrose Park, IL 60160

Drawing No.: 24107-1-1001
Project No.: 24107-1
Drawn By: JAR Rev: - Date: 03/10/21

Scale: NTS

GLAZING DETAIL

G1 – SINGLE GLAZE

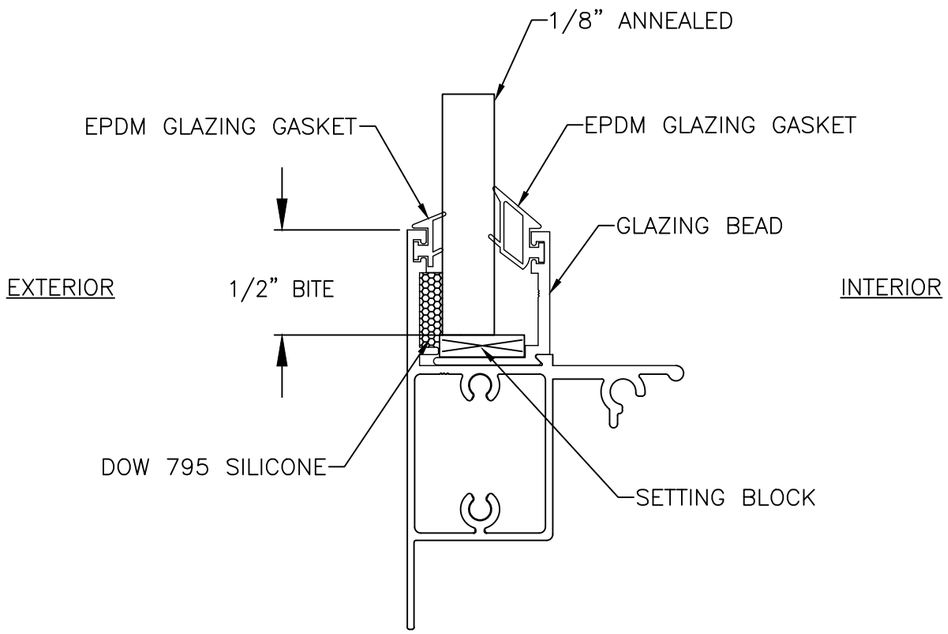

47000 Single Hung - non-Impact
Glazing Details

TAFCO Corporation
1953 North 17th Avenue
Melrose Park, IL 60160

Drawing No.: 24107-1-1001
Project No.: 24107-1
Drawn By: JAR Rev: - Date: 03/10/21

Scale: NTS

Sheet 6 of 8